LZE GMBH • FRAUENWEIHERSTRASSE 15 • 91058 ERLANGEN

FH101RFBOB

RFICIENT® FH101RF BREAKOUT BOARD



VERSION DATE: 20.11.2026
EDITION 1
REVISION 4

Copyright © 2026, LZE GmbH

DOCUMENT CHANGE LOG

DATE	EDITION	REVISION	DESCRIPTION OF CHANGE	REVIEWER
14.10.2024	1	1	- INITIAL RELEASE	IIS
08.10.2026	1	2	- TABLE 6 DIMENSIONS UPDATED - TABLE 5 RF INPUT POWER ADDED - TABLE 5 VDD LIMITS UPDATED	IIS
26.10.2026	1	3	- TABLE 5 DC VOLTAGE ON RF INPUT ADDED	
20.11.2026	1	4	- SECTIONS OPEN SOURCE SOFTWARE AND LICENCE AND APPENDIX LICENCE TEXT REMOVED - TABLE 4 VDD UPPER LIMIT CORRECTED TO 3.63 V - COPYRIGHT YEAR IN FOOTER UPDATED - ORDERING INFORMATION EXTENDED BY VARIANTS AND GTIN - SECTION SOFTWARE EXAMPLES ADDED	

Copyright © 2026, LZE GmbH

0
Content

0 Content 3
1 Introduction 4
2 Board structure 5
3 Pin assignment 7
4 MCU connection 8
5 Operating conditions 10
6 Ordering information 11
7 Board-Schematic 12
8 Software examples 13
9 LZE GmbH 14

Copyright © 2026, LZE GmbH

1 Introduction

The FH101RF breakout board (FH101RFBOB) is a board the size of a postage stamp based on the RFicient FH101RF radio receiver. Equipped with all components necessary for the operation of the receiver such as RF signal filtering, matching network and clock generation. The FH101RFBOB enables simple and cost-effective integration of the FH101RF receiver into an existing application or system. All signals required to control, operate and evaluate the receiver are implemented on a 0.1(in) pin header. The antennas are connected via SMA connectors.

The board is designed for radio reception on the following bands: 433/868/915/2G4, whereby there are two versions of the board: EU and NON_EU. These differ in the configuration of the corresponding SAW filter.

The FH101RFBOB is delivered in the corresponding version as selected in the order mask. It is also possible to order the antennas.

Copyright © 2026, LZE GmbH

2
Board structure

Figure 1 essentially shows the physical structure of the board, it illustrates the arrangement of the SMA connectors for the corresponding bands as well as the position of the receiver and the pin header for controlling the board.

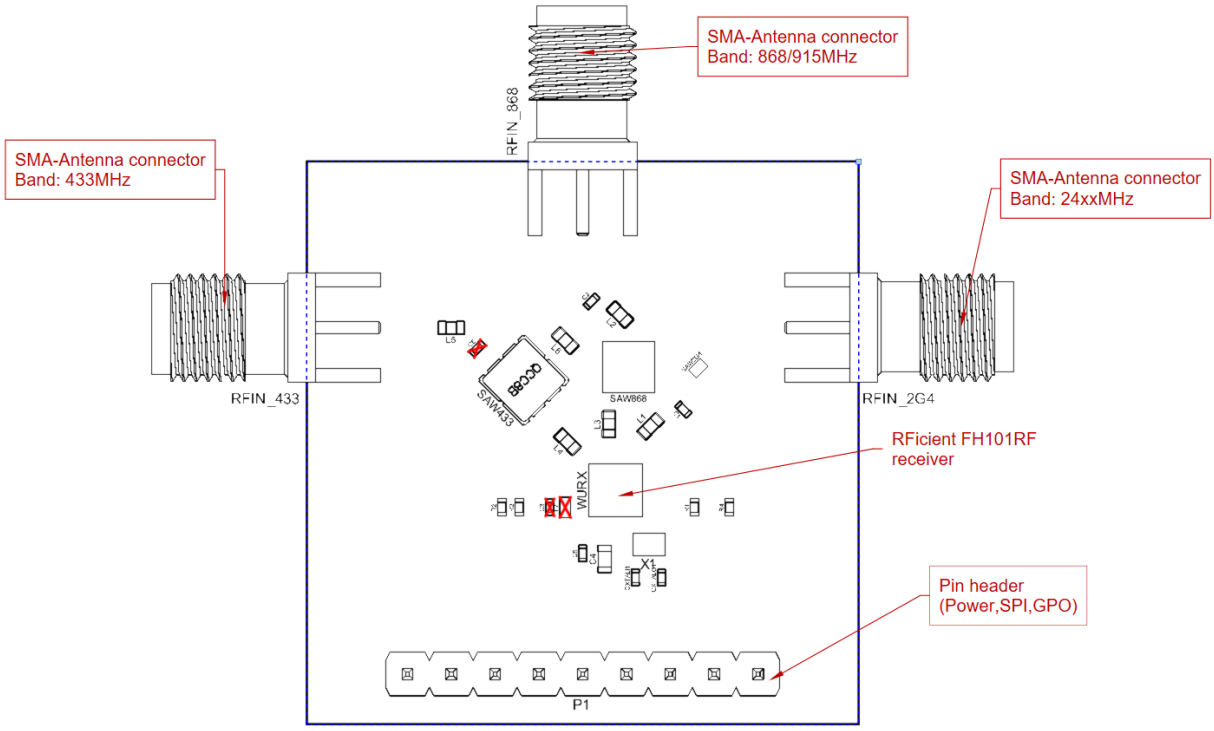

Figure 1 FH101RFBOB TOP-Structure

The circuit board provides the option of fitting an EMI shield. Attaching the EMI shield reduces the coupling of radio interference after RF signal filtering. The EMI shield is not fitted when the FH101RFBOB is delivered. The Table 1 contains the EMI-Shiel ordering information.

Type	Manufacturer	Part number
EMI-Shield-Frame	Wurth Elektronik	36103205
EMI-Shield-Cover	Wurth Elektronik	36003200

Table 1 EMI-Shield order information

Table 2 shows an overview of the antennas recommended for operation.

Band	MFG P/N
433	Linx ANT-433-CW-HWR-SMA
868	Linx ANT-868-CW-HWR-SMA
915	Linx ANT-916-CW-HWR-SMA
2G4	Linx ANT-2.4-CW-HWR-SMA

Table 2 Antenna order information

Copyright © 2026, LZE GmbH

Figure 2 shows the signal paths on the board as a block diagram. The configuration of the SAW filter in the 868/915 MHz signal path varies depending on the version ordered (EU/NONEU).

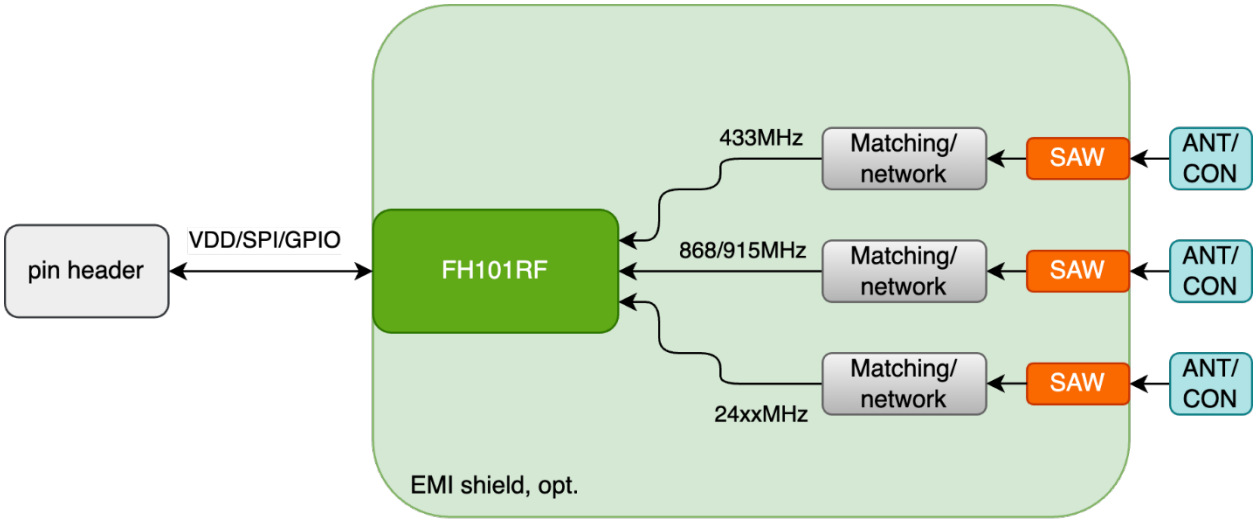

Figure 2 FH101RFBOB signal block diagram

Table 3 shows the SAW filters of the board.

Band	Manufacturer	Part number	Center frequency
433	RF360	B39431B3790Z810	433.9 MHz
868	RF360	B39871B3744H110	868.3 MHz
915	RF360	B39921B3300H110	916.5 MHz
2G4	RF360	B39252B7556P810	2478 MHz

Table 3 FH101RFBOB RF-SAW-Filter

Copyright © 2026, LZE GmbH

3
Pin assignment

For the FH101RF receiver to function correctly, the pin header of the FH101RFBOB must be connected to an SPI signal and voltage source. Different connection concepts are explained below.
It should be noted that the GPIO levels of the FH101RFBOB are defined by the supply voltage on the VDD pin.

Example: if the VDD(6) pin is connected to a voltage of 3 volts, the high level of the outputs is also 3 volts. The signals going into the board must not exceed this voltage, see the FH101RF data sheet.

Pin	Name	Function	Direction	Mandatory	Pin connection to FH101RF
1	RESET_N	FH101RF reset	In	No	Direct with PullUp
2	CS_N	SPI enable	In	Yes	Direct
3	MISO	SPI data out	Out	No, 3-Wire SPI	Through a resistor
4	MOSI	SPI data in	In/Out	Yes	Through a resistor
5	SCLK	SPI clock	In	Yes	Direct
6	VDD	Supply voltage (1.6V-3.63V)		Yes	Direct
7	GND	Ground		Yes	Direct
8	GPO2	FH101RF GPO	Out	Depends on the register 0x75 setting	Through a resistor
9	GPO1	FH101RF GPO	Out	Depends on the register 0x75 setting	Through a resistor

Table 4 FH101RFBOB pin assignment

Copyright © 2026, LZE GmbH

4
MCU connection

The FH101RFBOB supports 3-wire and 4-wire SPI. With 3-wire SPI, MISO and MOSI share a wire. This changes its direction after addressing depending on the read or write process.
The IRQ/GPO1 and IRQ/GPO2 signals can be assigned various functions, see the FH101RF data sheet. Basically, one of these pins serves as the interrupt output of the FH101RF receiver, which has the function of waking up the system when the wake-up signal is received by radio.

Some MCU manufacturers only support deep sleep wake-up on certain pins, this must be considered when connecting.

If there are not enough MCU pins available, it is possible to omit the connections that are not mandatory, see Table 4. These are wired accordingly on the circuit board and can be left open.

Figure 3 illustrates the connection of the FH101RFBOB to an MCU with 4-wire SPI interface. If there are not enough MCU pins available for 4-wire SPI, the SPI connection can also be connected as 3-wire SPI, Figure 4 shows the connection diagram with 3-wire SPI. The MCU must support 3-wire SPI.
For further information on SPI connection, please refer to the FH101RF data sheet.

Furthermore, all outputs of the FH101RFBOB board are connected in series through a 1K Ohm resistor. Figure 5 illustrates the connection of the FH101RFBOB pin header to the radio receiver.

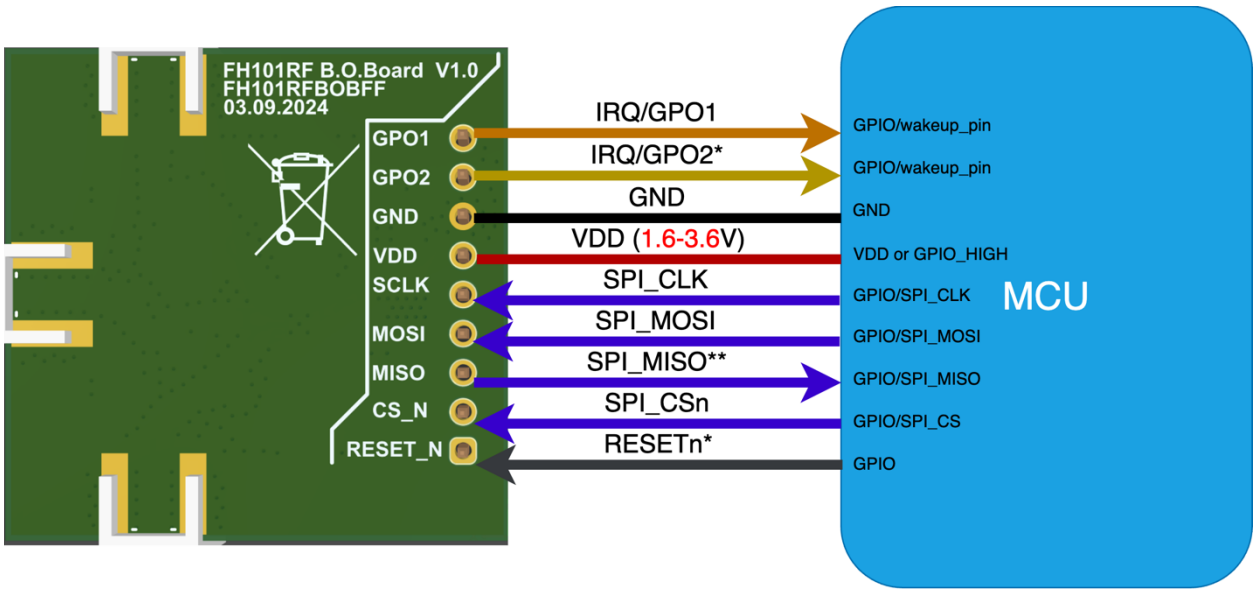

Figure 3 4-Wire SPI connection

Copyright © 2026, LZE GmbH

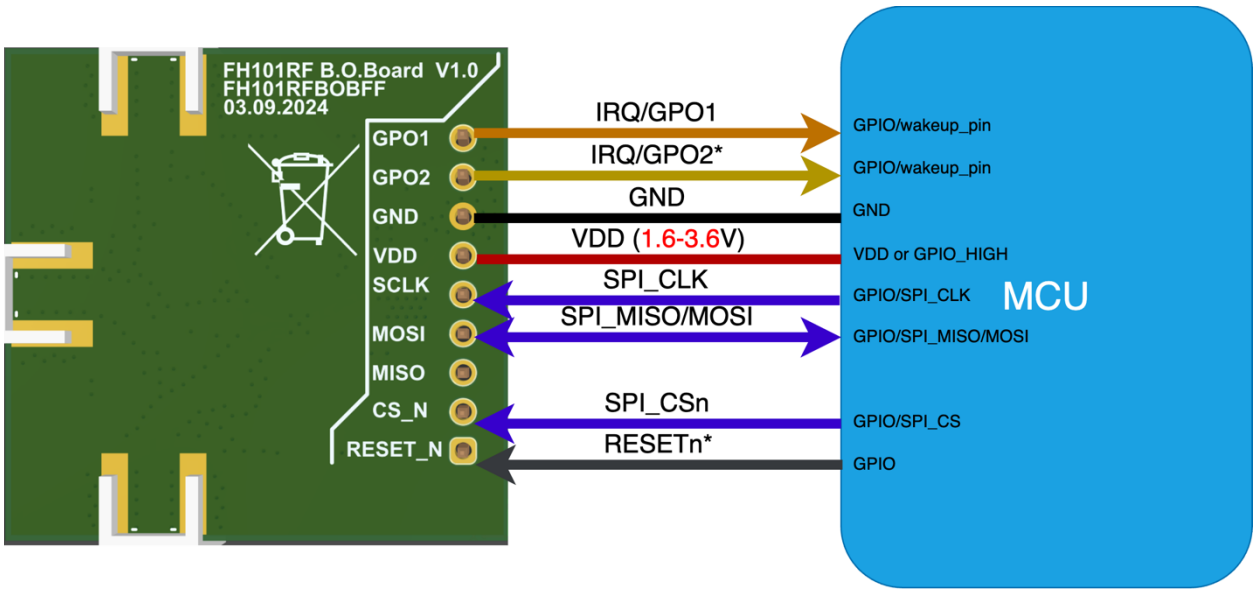

Figure 4 3-Wire SPI connection

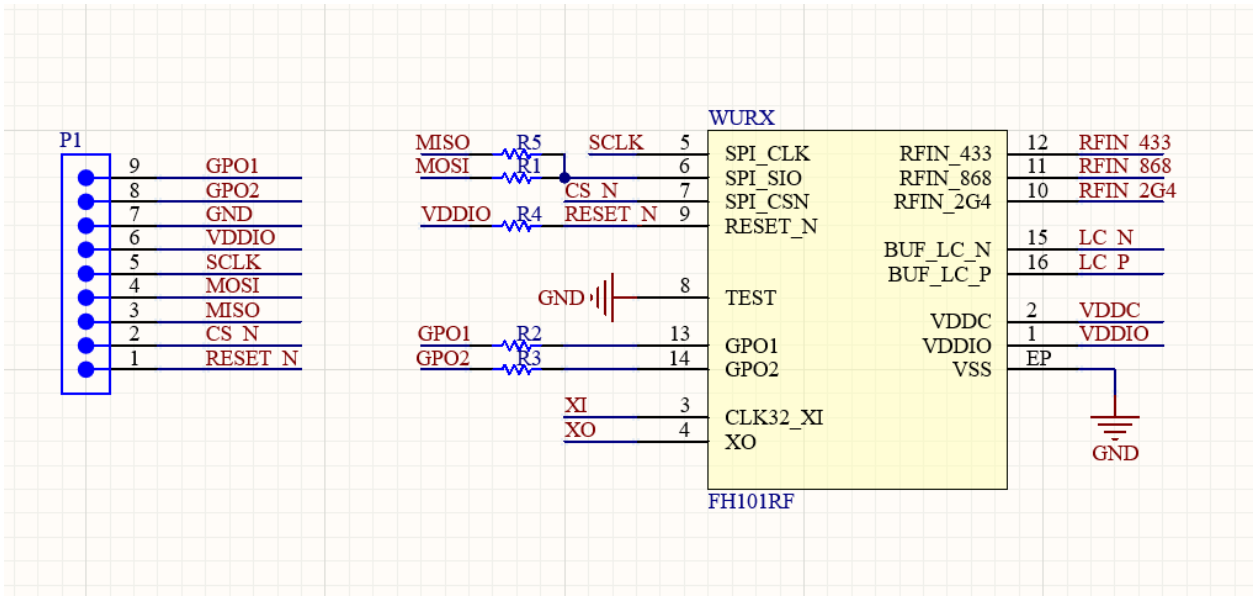

Figure 5 FH101RFBOB I/O schematic

Copyright © 2026, LZE GmbH

5
Operating conditions

Parameter	Min.	Typ.	Max.	Unit
Supply Voltage, pin VDD(6)	1.6		3.63	V
Voltage on digital I/O	-0.3		V_{vdd}+0.3	V
Digital HI input level	2		V_{vdd}+0.3	V
Digital LO input level	-0.3		0.8	V
Operating temperature	-20	20	85	°C
SPI frequency, pin SCLK			10	MHz
Current flow, pin VDD(6)			15	mA
Sensitivity, Band 433, Center 433.8 MHz		-71		dBm
Sensitivity, Band 868, Center 868.3 MHz		-72		dBm
Sensitivity, Band 915, Center 916.5 MHz		-72		dBm
Sensitivity, Band 2G4, Channel 2476MHz		-70		dBm
RF input power, Band 433			5	dBm
RF input power, Band 868			10	dBm
RF input power, Band 915			10	dBm
RF input power, Band 2G4			15	dBm
DC Voltage, Band 433			6	V
DC Voltage, Band 868			6	V
DC Voltage, Band 915			6	V
DC Voltage, Band 2G4			0	V

Table 5 FH101RFBOB operating conditions

Parameter	Height	Width	Unit
Dimension, board only	32	32.64	mm
Dimensions with SMA	50	41.64	mm

Table 6 FH101RFBOB dimensions

Copyright © 2026, LZE GmbH

6
Ordering information

Name	Receiving bands	Center frequencies (MHz)
FH101RFBOB_EU_V1.0	433/868/2G4	433.9/868.3/2478
FH101RFBOB_nonEU_V1.0	433/915/2G4	433.9/916.5/2478

The FH101RFBOB is available in the LZE Innovation store: www.lze-innovation.de/products/rficient-breakout-board. Each variant is identified by its GTIN, which is also the article number (SKU) in the store. The antennas included are the types listed in Table 2.

Board version	Antennas included	GTIN
FH101RFBOB_EU_V1.0	none	4251800200138
FH101RFBOB_EU_V1.0	433 MHz	4251800200152
FH101RFBOB_EU_V1.0	868 MHz	4251800200169
FH101RFBOB_EU_V1.0	2.4 GHz	4251800200176
FH101RFBOB_EU_V1.0	433 MHz + 868 MHz	4251800200183
FH101RFBOB_EU_V1.0	433 MHz + 2.4 GHz	4251800200190
FH101RFBOB_EU_V1.0	868 MHz + 2.4 GHz	4251800200206
FH101RFBOB_EU_V1.0	433 MHz + 868 MHz + 2.4 GHz	4251800200213
FH101RFBOB_nonEU_V1.0	none	4251800200145
FH101RFBOB_nonEU_V1.0	433 MHz	4251800200220
FH101RFBOB_nonEU_V1.0	915 MHz	4251800200237
FH101RFBOB_nonEU_V1.0	2.4 GHz	4251800200244
FH101RFBOB_nonEU_V1.0	433 MHz + 915 MHz	4251800200251
FH101RFBOB_nonEU_V1.0	433 MHz + 2.4 GHz	4251800200268
FH101RFBOB_nonEU_V1.0	915 MHz + 2.4 GHz	4251800200275
FH101RFBOB_nonEU_V1.0	433 MHz + 915 MHz + 2.4 GHz	4251800200282

Copyright © 2026, LZE GmbH

7
Board-Schematic

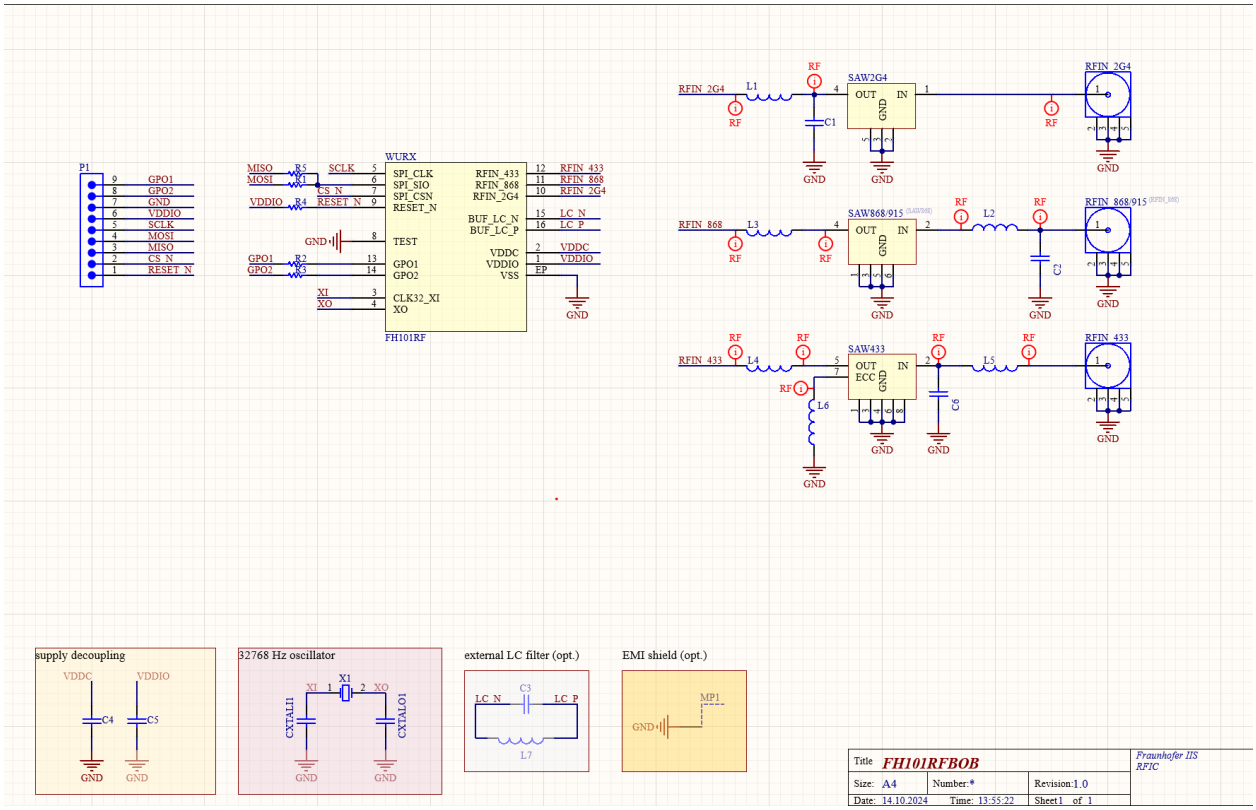

Figure 6 FH101RFBOB schematic EU and nonEU version

Copyright © 2026, LZE GmbH

8
Software examples

Ready-to-use hardware and software examples for the FH101RFBOB are published on GitHub: github.com/lzegmbh/RFicient_FH101RF_Demo

The repository contains the FH101RF driver, a generator for the wake-up telegram and Arduino sketches for the Adafruit Feather M0 RFM69HCW, which configure the receiver and transmit a matching signal.

The example code is licensed under the MIT License, Copyright (c) 2026 LZE GmbH. The licence text is part of the repository.

Copyright © 2026, LZE GmbH

LZE GmbH

Managing Director: Dr. Christian Forster
Frauenweiherstr. 15
91058 Erlangen

Contact
Phone: +49 9131 92894 80
E-Mail: kontakt[at]lze-innovation.de

Sales tax identification number according to § 27 a sales tax law: DE316405780
Commercial register number: HRB 16647
Competent local court: Fürth



*** End of document ***

Copyright © 2026, LZE GmbH